Work Order ID 67164

Wednesday, March 09, 2011 12:52:26 PM

Item ID: D3512-1
Revision ID:
Item Name: Wearplate
Start Date: 3/9/2011 **Start Qty:** 8.00
Required Date: 3/16/2011 **Req'd Qty:** 8.00
Reference:

Accept **Setup** **Start** **Stop**

Cust Item ID:
Customer:

Run **Start** **Stop**

Approvals: **Process Plan:** M **Date:** 11-03-9 **Tooling:** **Date:**
QC: **Date:** **SPC (Y/N):** **Date:**

Sequence ID/ Work Center ID	Operation Description	Set Up/ Run Hours	Tool ID	Tool #	Plan Code	Accept Qty	Reject Qty	Reject Number	Insp. Stamp
Draw Nbr	**Revision Nbr**								
D3512	Rev C								
100	FLOW WATER JET	0.00							
Waterjet	**Memo**	0.00				AB 11-3-9			
FLOW CNC Waterjet	1-Cut as per Dwg D3512 ☐Dwg Rev: C ☐Prog Rev: C ☐2-Deburr if necessary								
110	QC2- Inspect parts off machine FAI/FAIB	0.00							
QC	**Memo**	0.00				AB 11-3-9			
Quality Control									
120	QC8- Inspect parts - second check	0.00							
QC	**Memo**	0.00				x8			
Quality Control									

6 ASAP

8

11/03/10

Dart Aerospace Ltd

W/O:		WORK ORDER CHANGES					
DATE	STEP	PROCEDURE CHANGE	By	Date	Qty	Approval Chief Eng / Prod Mgr	Approval QC Inspector

Part No: _____ **PAR #:** _____ **Fault Category:** _____ **NCR:** Yes No **DQA:** _____ **Date:** _____

Resolution: _____ **Disposition:** _____ **QA: N/C Closed:** _____ **Date:** _____

NCR:		WORK ORDER NON-CONFORMANCE (NCR)						
DATE	STEP	Description of NC Section A	Corrective Action Section B			Verification Section C	Approval Chief Eng	Approval QC Inspector
			Initial Chief Eng	Action Description Chief Eng	Sign & Date			

NOTE: Date & initial all entries

H:\fFORMS\Quality Assurance\approved QA\NCRWO RevE

Work Order ID 67164

Wednesday, March 09, 2011 12:52:26 PM

Item ID: D3512-1
Revision ID:
Item Name: Wearplate
Start Date: 3/9/2011 **Start Qty:** 8.00
Required Date: 3/16/2011 **Req'd Qty:** 8.00
Reference:

Accept

Setup Start
Stop

Cust Item ID:
Customer:

Run Start
Stop

Approvals: **Process Plan:** _____ **Date:** _____ **Tooling:** _____ **Date:** _____
QC: _____ **Date:** _____ **SPC (Y/N):** _____ **Date:** _____

Sequence ID/ Work Center ID	Operation Description	Set Up/ Run Hours	Tool ID	Tool #	Plan Code	Accept Qty	Reject Qty	Reject Number	Insp. Stamp
130	NC BRAKE	0.00				8			
Brake NC	**Memo**	0.00							
Brake NC	Deburr if necessary□Form as per dwg D3512 using DT8179		SB 11/03/10						
140	QC5- Inspect part completeness to step on W/O	0.00							
QC	**Memo**	0.00				M	11	03	10 8
Quality Control									
150	Large Fab	0.00							
Large Fab	**Memo**	0.00				EL	11-3-22		18
Large Fab	Weld hard surface using DT8874 as per Dwg D3512 & QSI 004□Qty Description Batch□A/R 2059b Hardcoat Rod M117189								

Dart Aerospace Ltd

W/O:		WORK ORDER CHANGES					
DATE	STEP	PROCEDURE CHANGE	By	Date	Qty	Approval Chief Eng / Prod Mgr	Approval QC Inspector

Part No: _____ **PAR #:** _____ **Fault Category:** _____ **NCR:** Yes No **DQA:** _____ **Date:** _____

Resolution: _____ **Disposition:** _____ **QA: N/C Closed:** _____ **Date:** _____

NCR:		WORK ORDER NON-CONFORMANCE (NCR)						
DATE	STEP	Description of NC Section A	Corrective Action Section B			Verification Section C	Approval Chief Eng	Approval QC Inspector
			Initial Chief Eng	Action Description Chief Eng	Sign & Date			

NOTE: Date & initial all entries

Work Order ID 67164

Wednesday, March 09, 2011 12:52:26 PM

Item ID: D3512-1 **Accept** **Setup Start**

Revision ID: **Stop**

Item Name: Wearplate

Start Date: 3/9/2011 **Start Qty:** 8.00 **Cust Item ID:**

Required Date: 3/16/2011 **Req'd Qty:** 8.00 **Customer:**

Reference:

Run Start

Approvals: **Process Plan:** _____ **Date:** _____ **Tooling:** _____ **Date:** _____

Stop

QC: _____ **Date:** _____ **SPC (Y/N):** _____ **Date:** _____

Sequence ID/ Work Center ID	Operation Description	Set Up/ Run Hours	Tool ID	Tool #	Plan Code	Accept Qty	Reject Qty	Reject Number	Insp. Stamp
160	QC10- Inspect visual per QSI004- ground welds	0.00							
QC	Memo	0.00 δ 11/03/22							
Quality Control									
170	QC5- Inspect part completeness to step on W/O	0.00							
QC	Memo	0.00 δ 11/03/22				(X8)			
Quality Control									
180	Grey Sandtex(Ref:4.3.5.6) per QSI005 4.3	0.00							
Powdercoat	Memo	0.00				(8X)	m-1 11/03/22		
Powder Coating	START TIME: 12:00 ☐OVEN TEMPERATURE:								
	M11 5128 12:30 ☐FINISH TIME: 320°F								

Dart Aerospace Ltd

W/O:	WORK ORDER CHANGES						
DATE	STEP	PROCEDURE CHANGE	By	Date	Qty	Approval Chief Eng / Prod Mgr	Approval QC Inspector

Part No: _____ **PAR #:** _____ **Fault Category:** _____ **NCR:** Yes No **DQA:** _____ **Date:** _____

Resolution: _____ **Disposition:** _____ **QA: N/C Closed:** _____ **Date:** _____

NCR:	WORK ORDER NON-CONFORMANCE (NCR)							
DATE	STEP	Description of NC Section A	Corrective Action Section B			Verification Section C	Approval Chief Eng	Approval QC Inspector
			Initial Chief Eng	Action Description Chief Eng	Sign & Date			

NOTE: Date & initial all entries

Work Order ID 67164

Wednesday, March 09, 2011 12:52:26 PM

Item ID: D3512-1
Revision ID:
Item Name: Wearplate
Start Date: 3/9/2011 **Start Qty:** 8.00
Required Date: 3/16/2011 **Req'd Qty:** 8.00
Reference:

Accept

Setup Start
Stop

Cust Item ID:
Customer:

Run Start
Stop

Approvals: **Process Plan:** _____ **Date:** _____ **Tooling:** _____ **Date:** _____
QC: _____ **Date:** _____ **SPC (Y/N):** _____ **Date:** _____

Sequence ID/ Work Center ID	Operation Description	Set Up/ Run Hours	Tool ID	Tool #	Plan Code	Accept Qty	Reject Qty	Reject Number	Insp. Stamp
190	QC3- Inspect Part Finish	0.00				8	BK	11-3-22	
QC	Memo	0.00							
Quality Control									
200	Identify as per dwg & Stock Location: TW	0.00							
Packaging	Memo	0.00							
Packaging									
210	QC21- Final Inspection - Work Order Release	0.00						11/3/22	
QC	Memo	0.00							
Quality Control									

MF
11-03-22

Dart Aerospace Ltd

W/O:		WORK ORDER CHANGES					
DATE	STEP	PROCEDURE CHANGE	By	Date	Qty	Approval Chief Eng / Prod Mgr	Approval QC Inspector

Part No: _____ **PAR #:** _____ **Fault Category:** _____ **NCR:** Yes No **DQA:** _____ **Date:** _____

Resolution: _____ **Disposition:** _____ **QA: N/C Closed:** _____ **Date:** _____

NCR:		WORK ORDER NON-CONFORMANCE (NCR)						
DATE	STEP	Description of NC Section A	Corrective Action Section B			Verification Section C	Approval Chief Eng	Approval QC Inspector
			Initial Chief Eng	Action Description Chief Eng	Sign & Date			

NOTE: Date & initial all entries

H:\fFORMS\Quality Assurance\approved QA\NCRWO RevE

Picklist Print

Wednesday, March 09, 2011 12:52:33 PM

Work Order ID: 67164

Parent Item: D3512-1

Parent Item Name: Wearplate

Start Date: 3/9/2011 **Required Date:** 3/16/2011

Start Qty: 8.00 **Required Qty:** 8.00

Comments:
IPP Rev:A New Issue 06-06-20 JLM
IPP Rev:B Now SS as per Rev B 06-12-15 JLM
IPP Rev:C Rev C dwg 07-12-06 DD

Component Item ID/ Item Name	Replacement Item ID	Mfg/ Purch	Bin Item	Primary Location	Last Location	Route Seq ID	Unit of Measure	Qty on Hand	Qty per Kit	Total Qty	Qty Issued	Date Issued	Status
M304S16GA 304/316 Sheet .063		Purchased	No			100	sf	15.5000	0.261	2.197895 1B11-3-4			

Location	Loc Qty	Loc Code
MAT	15.5	
111323	0	
116623	15.5	116623

8

Dart Aerospace Ltd

W/O:		WORK ORDER CHANGES					
DATE	STEP	PROCEDURE CHANGE	By	Date	Qty	Approval Chief Eng / Prod Mgr	Approval QC Inspector

Part No: _____ **PAR #:** _____ **Fault Category:** _____ **NCR:** Yes No **DQA:** _____ **Date:** _____

Resolution: _____ **Disposition:** _____ **QA: N/C Closed:** _____ **Date:** _____

NCR:		WORK ORDER NON-CONFORMANCE (NCR)						
DATE	STEP	Description of NC Section A	Corrective Action Section B			Verification Section C	Approval Chief Eng	Approval QC Inspector
			Initial Chief Eng	Action Description Chief Eng	Sign & Date			

NOTE: Date & initial all entries

H:\fFORMS\Quality Assurance\approved QA\NCRWO RevE

DART AEROSPACE LTD	Work Order:	67164
Description: Wearplate	Part Number:	D3512-1
Inspection Dwg: D3512 **Rev:** C		Page 1 of 1

FIRST ARTICLE INSPECTION CHECKLIST

[X] First Article [ ] Prototype

Drawing Dimension	Tolerance	Actual Dimension	Accept	Reject	Method of Inspection	Comments
0.375	+/-0.010	.375	✓		V IBC 2	
12.600	+/-0.010	12.600	✓		T	
0.145	+/-0.010	.145	✓		V	
0.750	+/-0.010	.744	✓		V	
2.631	+/-0.010	2.632	✓		V	
2.341	+/-0.010	2.345	✓		V	
1.240	+/-0.010	1.234	✓		V	
0.220	+/-0.010	.222	✓		V	
0.380	+/-0.010	.382	✓		V	
0.063	+/-0.010	.057	✓		V	

Measured by:	IB	Audited by:		Prototype Approval:	N/A
Date:	11-3-9	Date:	11/03/10	Date:	N/A

Rev	Date	Change	Revised by	Approved
A	07.04.02	New Issue	KJ/JLM	
B	08.01.16	Dimensions updated per Dwg Rev C	KJ/EC/DD	

Dart Aerospace Ltd

W/O:		WORK ORDER CHANGES					
DATE	STEP	PROCEDURE CHANGE	By	Date	Qty	Approval Chief Eng / Prod Mgr	Approval QC Inspector

Part No: _____ **PAR #:** _____ **Fault Category:** _____ **NCR:** Yes No **DQA:** _____ **Date:** _____

Resolution: _____ **Disposition:** _____ **QA: N/C Closed:** _____ **Date:** _____

NCR:		WORK ORDER NON-CONFORMANCE (NCR)						
DATE	STEP	Description of NC Section A	Corrective Action Section B			Verification Section C	Approval Chief Eng	Approval QC Inspector
			Initial Chief Eng	Action Description Chief Eng	Sign & Date			

NOTE: Date & initial all entries

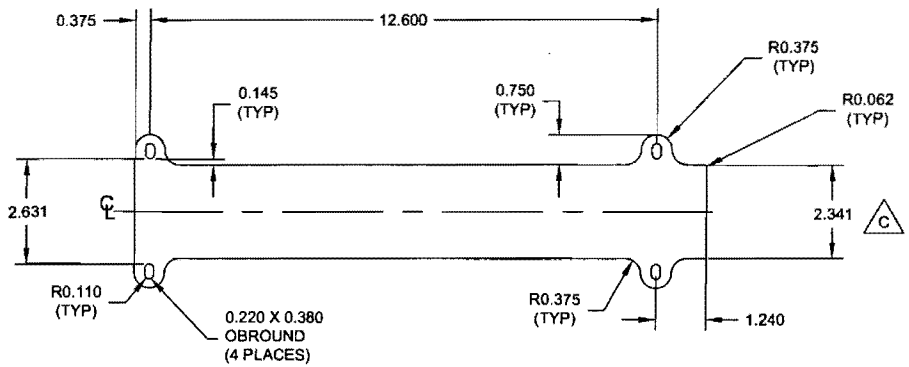

D3512-1F FLAT PATTERN

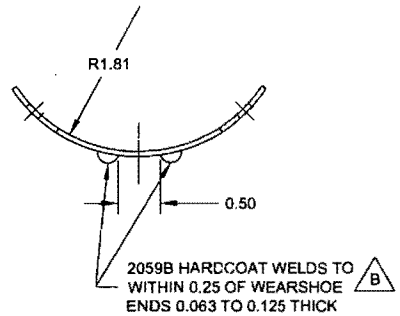

SECTION A-A
SCALE 2:3

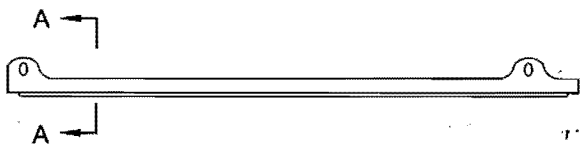

D3512-1 BENDING DETAIL

SHOP COPY
RETURN TO
ENGINEERING
UNCONTROLLED COPY
SUBJECT TO AMENDMENT
WITHOUT NOTICE
WORK ORDER
NO. 67164

pl 11-03-9

RELEASED
07.11.16

C

NOTES:
1) MATERIAL: AISI 304/316 SS SHEET PER AMS 5513 OR AMS 5524, 16 GAUGE (0.063 THICK)
(REF. DART MATERIAL SPEC M304S16GA)
2) FINISH: POWDER COAT GREY SANDTEX (4.3.5.6) PER DART QSI 005 4.3
3) TOLERANCES: PER DART QSI 018 UNLESS OTHERWISE NOTED
4) UNITS: INCHES UNLESS OTHERWISE NOTED
5) BREAK SHARP EDGES: 0.005 TO 0.015
6) IDENTIFICATION: N/A
7) WEIGHT: 1.31 lbs

REV.	DESCRIPTION	BY	DATE
C	ENLARGE OBROUND FOR EASIER ASSEMBLY UPDATE DRAWING FORMAT ADD WEIGHT	PH	07.10.05
B	CHANGE MATERIAL TO STAINLESS STEEL	PH	06.10.27
A	NEW ISSUE	PH	06.04.21

DESIGN		**DART AEROSPACE USA, INC** PORT HADLOCK, WA	
DRAWN			
CHECKED		DRAWING NO.	REV. C
MFG. APPR.		D3512	SHEET 1 OF 1
APPROVED		TITLE	SCALE
DE APPR.		WEARPLATE	1:3
DATE	07.10.05		

Dart Aerospace Ltd

W/O:		WORK ORDER CHANGES					
DATE	STEP	PROCEDURE CHANGE	By	Date	Qty	Approval Chief Eng / Prod Mgr	Approval QC Inspector

Part No: _____ **PAR #:** _____ **Fault Category:** _____ **NCR:** Yes No **DQA:** _____ **Date:** _____

Resolution: _____ **Disposition:** _____ **QA: N/C Closed:** _____ **Date:** _____

NCR:		WORK ORDER NON-CONFORMANCE (NCR)						
DATE	STEP	Description of NC Section A	Corrective Action Section B			Verification Section C	Approval Chief Eng	Approval QC Inspector
			Initial Chief Eng	Action Description Chief Eng	Sign & Date			

NOTE: Date & initial all entries